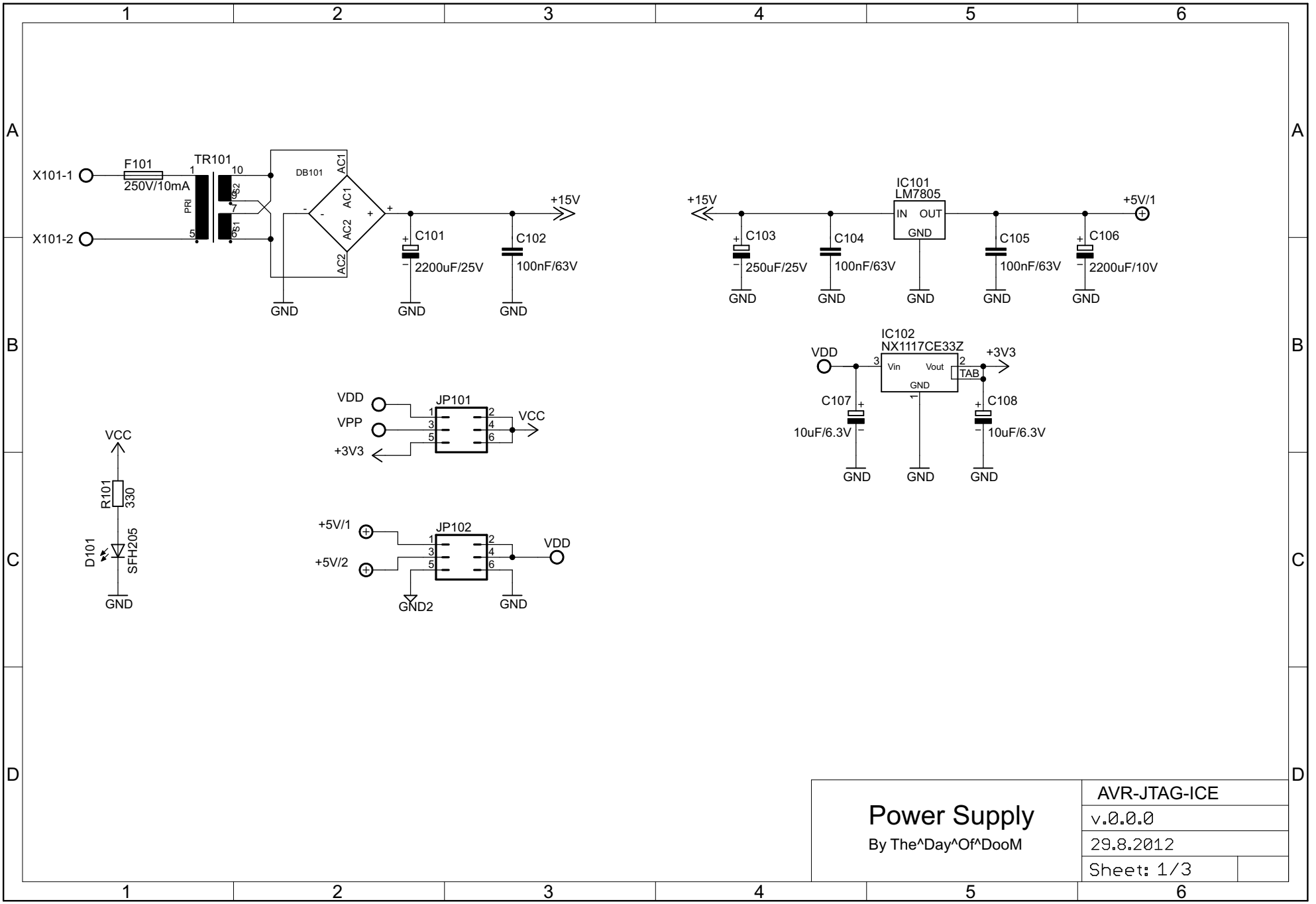

Power Supply	AVR-JTAG-ICE
By The^Day^Of^DooM	v.0.0.0
	29.8.2012
	Sheet: 1/3

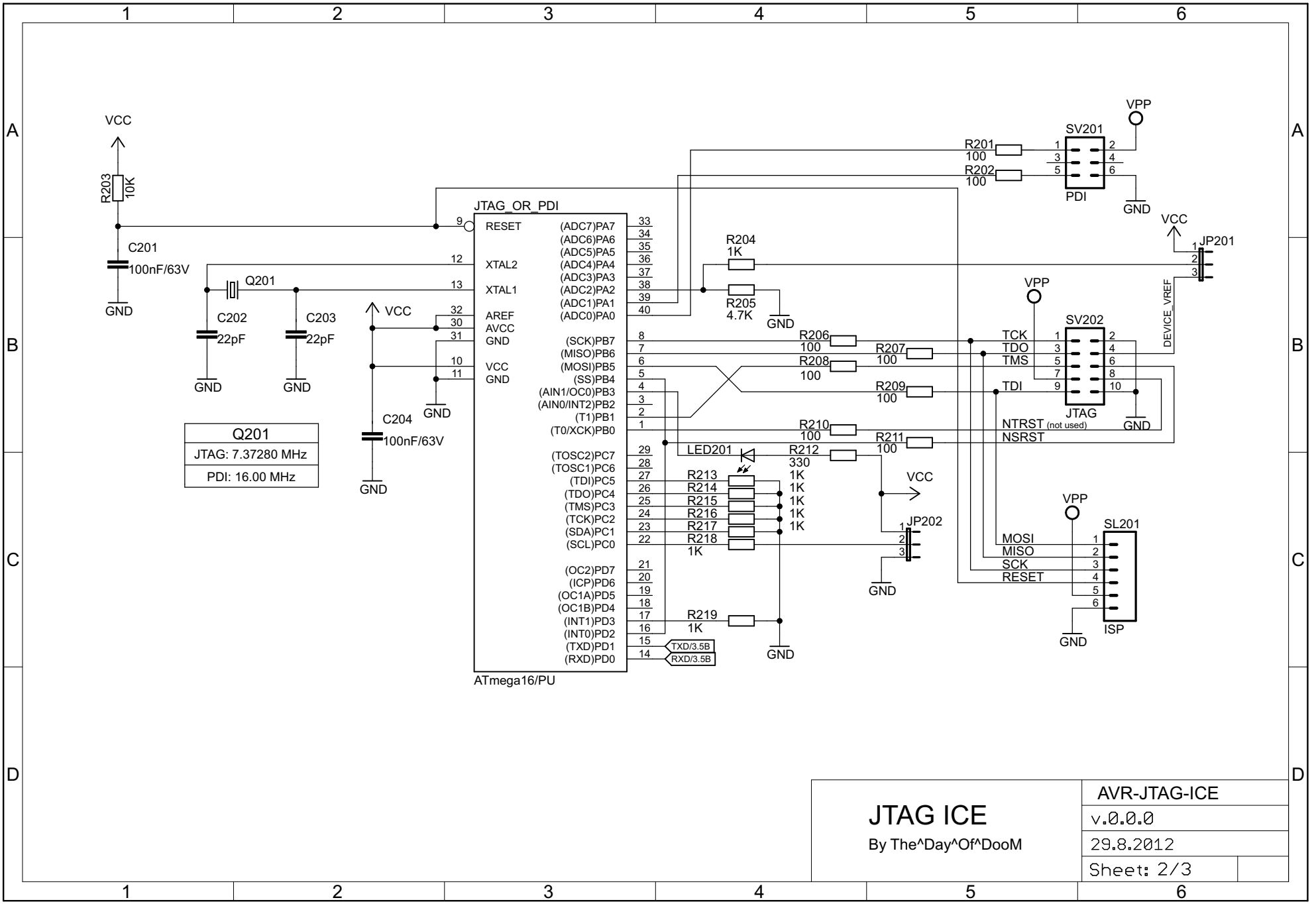
VCC
R203
10K
C201
100nF/63V
GND
Q201
C202
22pF
C203
22pF
GND
GND
VCC
C204
100nF/63V
GND
GND
Q201
JTAG: 7.37280 MHz
PDI: 16.00 MHz
JTAG_OR_PDI
RESET
XTAL2
XTAL1
AREF
AVCC
GND
VCC
GND
(SCK)PB7
(MISO)PB6
(MOSI)PB5
(SS)PB4
(AIN1/OC0)PB3
(AIN0/INT2)PB2
(T1)PB1
(T0/XCK)PB0
(TOSC2)PC7
(TOSC1)PC6
(TDI)PC5
(TDO)PC4
(TMS)PC3
(TCK)PC2
(SDA)PC1
(SCL)PC0
(OC2)PD7
(ICP)PD6
(OC1A)PD5
(OC1B)PD4
(INT1)PD3
(INT0)PD2
(TXD)PD1
(RXD)PD0
(ADC7)PA7
(ADC6)PA6
(ADC5)PA5
(ADC4)PA4
(ADC3)PA3
(ADC2)PA2
(ADC1)PA1
(ADC0)PA0
ATmega16/PU
TXD/3.5B
RXD/3.5B
R204
1K
R205
4.7K
GND
LED201
R212
330
R213
R214
R215
R216
R217
R218
1K
R219
1K
GND
VCC
JP202
GND
R201
100
R202
100
SV201
PDI
VPP
GND
VCC
JP201
DEVICE_VREF
VPP
SV202
JTAG
TCK
TDO
TMS
TDI
NTRST (not used)
NSRST
GND
R206
100
R207
100
R208
100
R209
100
R210
100
R211
100
VPP
SL201
ISP
MOSI
MISO
SCK
RESET
GND
JTAG ICE
By The^Day^Of^DooM
AVR-JTAG-ICE
v.0.0.0
29.8.2012
Sheet: 2/3

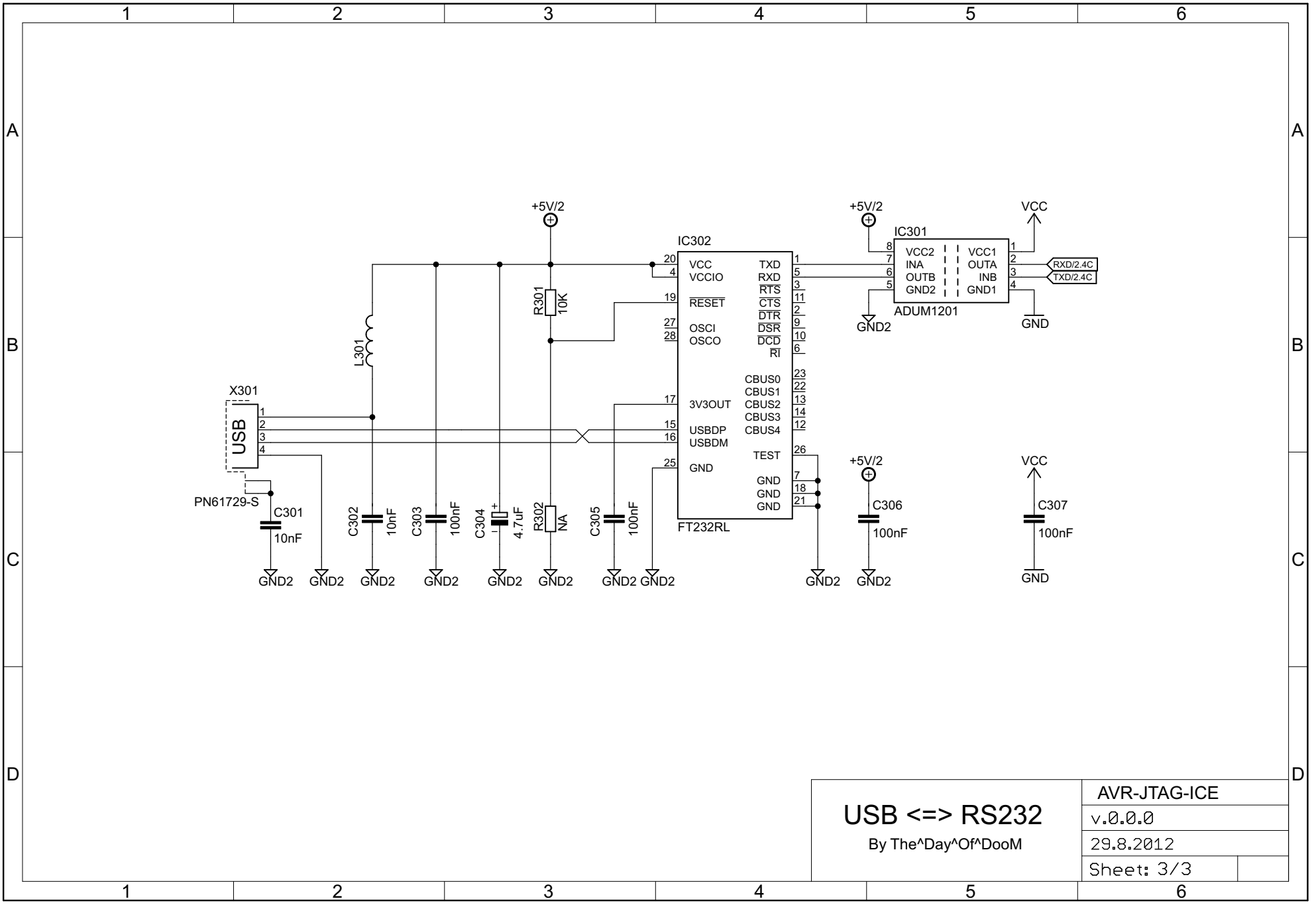
1
2
3
4
5
6
A
B
C
D
+5V/2
IC302
VCC
VCCIO
RESET
OSCI
OSCO
3V3OUT
USBDP
USBDM
GND
TXD
RXD
RTS
CTS
DTR
DSR
DCD
RI
CBUS0
CBUS1
CBUS2
CBUS3
CBUS4
TEST
GND
GND
GND
FT232RL
R301
10K
L301
X301
USB
PN61729-S
C301
10nF
C302
10nF
C303
100nF
C304
4.7uF
R302
NA
C305
100nF
GND2
+5V/2
IC301
VCC2
INA
OUTB
GND2
VCC1
OUTA
INB
GND1
ADUM1201
VCC
RXD/2.4C
TXD/2.4C
GND
C306
100nF
C307
100nF
USB <=> RS232
By The^Day^Of^DooM
AVR-JTAG-ICE
v.0.0.0
29.8.2012
Sheet: 3/3